DO NOT SCALE	METRIC	THIRD ANGLE PROJECTION
DIMENSIONS IN mm		

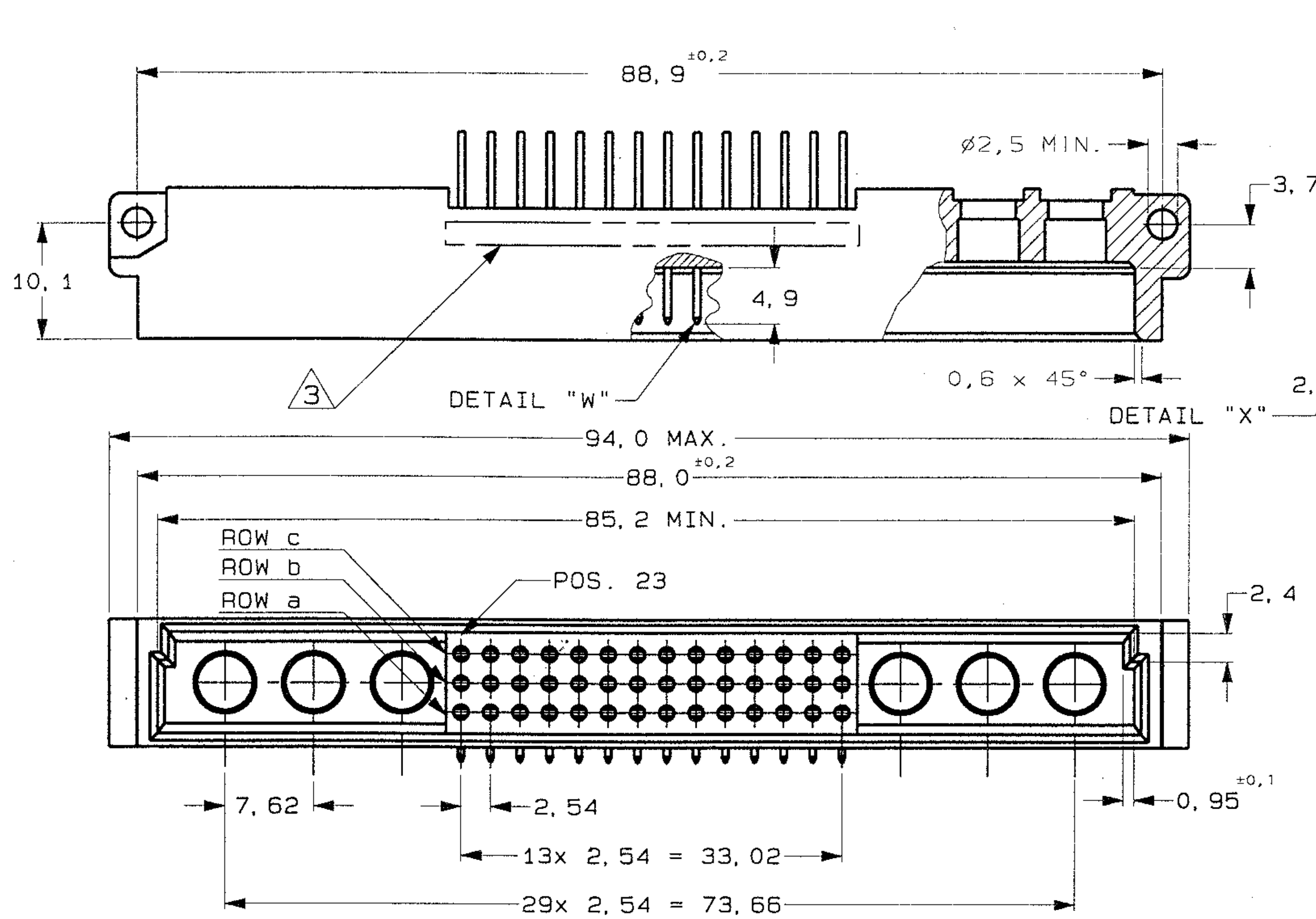

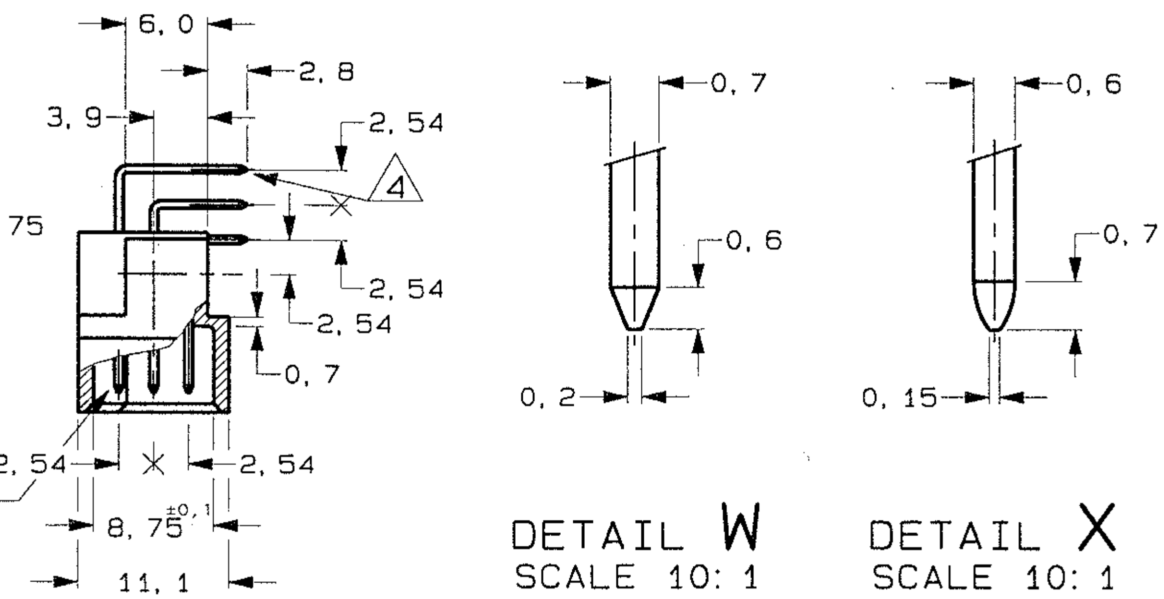

ROW	32	31	30	29	28	27	26	25	24	23	22	21	20	19	18	17	16	15	14	13	12	11	10	9	8	7	6	5	4	3	2	1
c										X	X	X	X	X	X	X	X	X	X	X	X	X	X									
b		O			O			O		X	X	X	X	X	X	X	X	X	X	X	X	X	X	O			O			O		
a										X	X	X	X	X	X	X	X	X	X	X	X	X	X									

AN ASTERISK ,,X'' DENOTES A SIGNAL CONTACT.

AN ASTERISK ,,O'' DENOTES A POWER CAVITY.

NOTES:

1. MATERIAL :
   - HOUSING : GLASSFILLED POLYESTER (GREY).
   - CONTACTS: BRASS.
2. PLATING CONTACT :
   -4 : 0,8μm Au OVER 1,25μm Ni AT CONTACT AREA.
   ON SOLDER POST 2,54μm Sn/Pb OVER 1,25μm Ni.
3. CONNECTOR PRINTED WITH PARTNUMBER AND DATE CODE.
4. SOLDER POSTS SUITABLE FOR P.C.B. HOLES
   0,8 ±0,05 OR 1,0 ±0,1 DIA.
5. ALL TOLERANCES UNLESS OTHERWISE SPECIFIED :
   1 DEC. PLACE ± 0,1 mm
   2 DEC. PLACE ± 0,05 mm

FINISH	MATERIAL	PARTNUMBER
SEE NOTE 2	SEE NOTE 1	-
		216977-4

LTR.	REVISION RECORD	DR.	CHK.	DATE
-	-	-	-	-
-	-	-	-	-
-	-	-	-	-
-	-	-	-	-
-	-	-	-	-
C	EH-1386-98	LvdH	RotB	31 AUG'98
B	EH-0695-97	J.G.	J.G.	13-08-97

DR.: R.v.Lokven	CHK.: R.op ten Berg	APP.: R.op ten Berg
DATE: 16-03-90	DATE: -	DATE: -

CUSTOMER DRAWING — FOR REFERENCE ONLY WILL NOT BE UPDATED

© COPYRIGHT 19- BY AMP HOLLAND B.V.
ALL INTERNATIONAL RIGHTS RESERVED. AMP PRODUCTS MAY BE COVERED BY U.S. AND FOREIGN AND/OR PATENTS PENDING.
THIS DRAWING IS UNPUBLISHED
~~RELEASED FOR PUBLICATION : 19~~

AMP HOLLAND B.V.
's-Hertogenbosch,
The Netherlands.

NAME

42 POS. DIN 41612 TYPE M MALE SOLDER CONNECTOR

DWG.No.	REV.LTR.	SHEET	
C-216977	C	1 OF 1	A3